DENVER VIBRATOR
An American Tradition

Belt Housing & Base Mounting

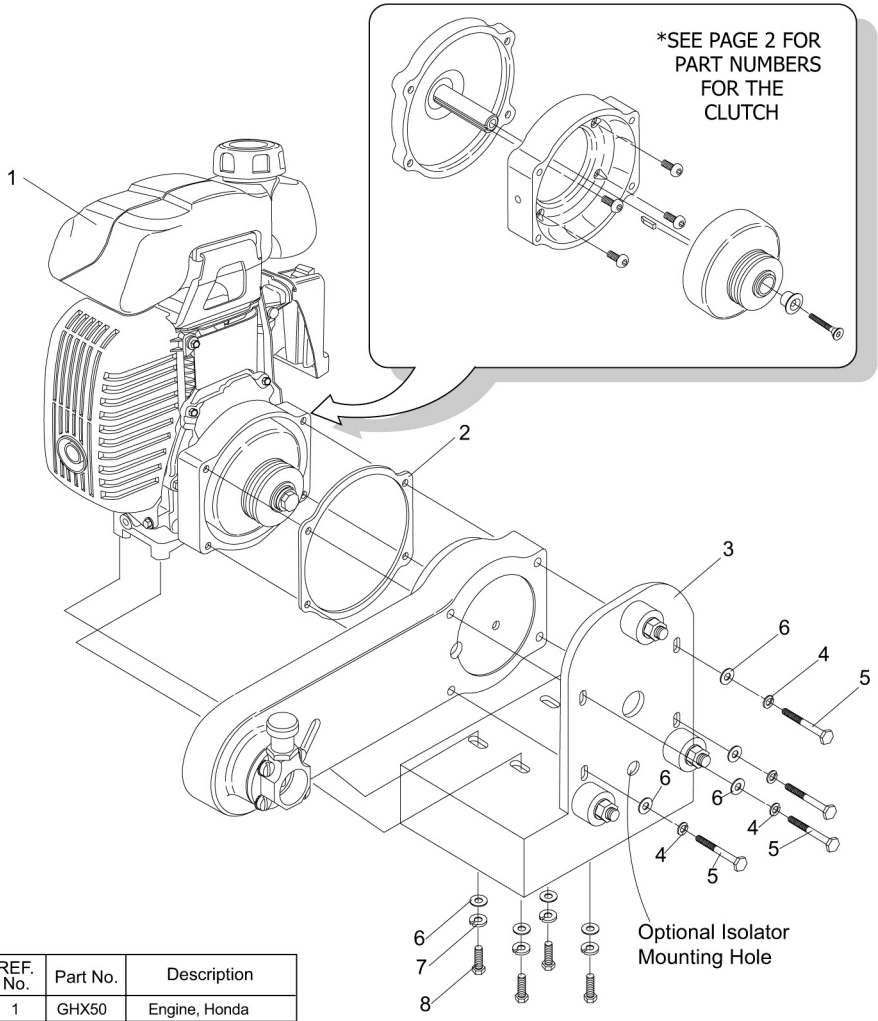

REF. No.	Part No.	Description
1	GHX50	Engine, Honda
2	GBP0018	Gasket, Temp. Isolator
3	GBP0060	Base Assembly
4	GBP0312	Washer, Split
5	GBP0313	Bolt. Hex Head
6	GBP0314	Washer, Flat
7	GBP0319	Washer, Split
8	GBP0316	Bolt, Hex Head