DENVER VIBRATOR
An American Tradition

Rubber Mounts & Engine Platform

REF. No.	Part No.	Description
1	GBP0060	Base Assembly
2	GBP0062	Isolators
3	GBP0311	5/16" , F ,Washer
4	GBP0310	5/16" , Washer, Split
5	GBP0318	5/16" , Nut

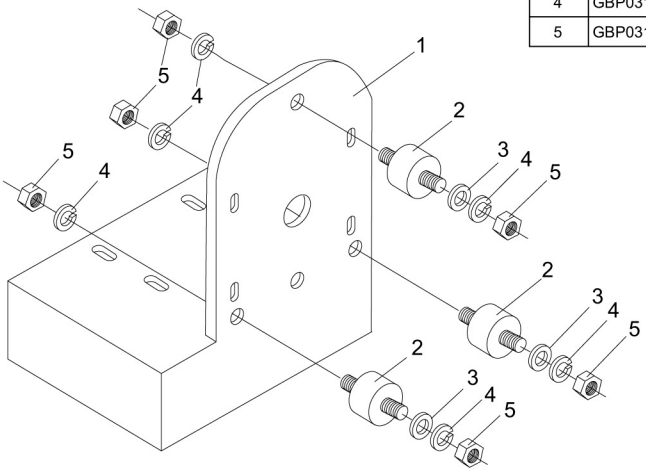

Engine Throttle Control Assembly

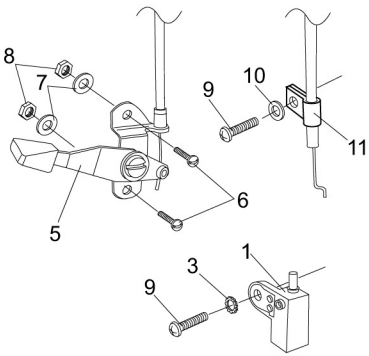

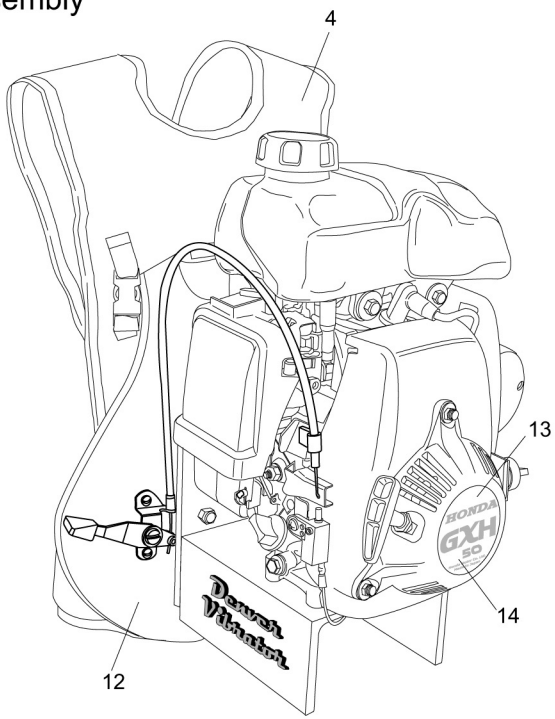

REF. No.	Part No.	Description
1	HN200	Switch, Stop
3	25623000	Washer
4	GBP0201	Backpack Padding V2
5	GBP0023	Throttle Assembly V2
6	12123408	Bolt, Attachment
7	25623400	Washer
8	20063400	Nut
9	12103408	Bolt, Attachment
10	25623400	Washer
11	10789	Insulated Clip
12	GBP0101	Backpack Frame V2
13	GBP0017	Recoil Assebmly Modified
14	GBP0017-2	Recoil Cover - Modified