DENVER VIBRATOR

An American Tradition

Belt Housing Unit

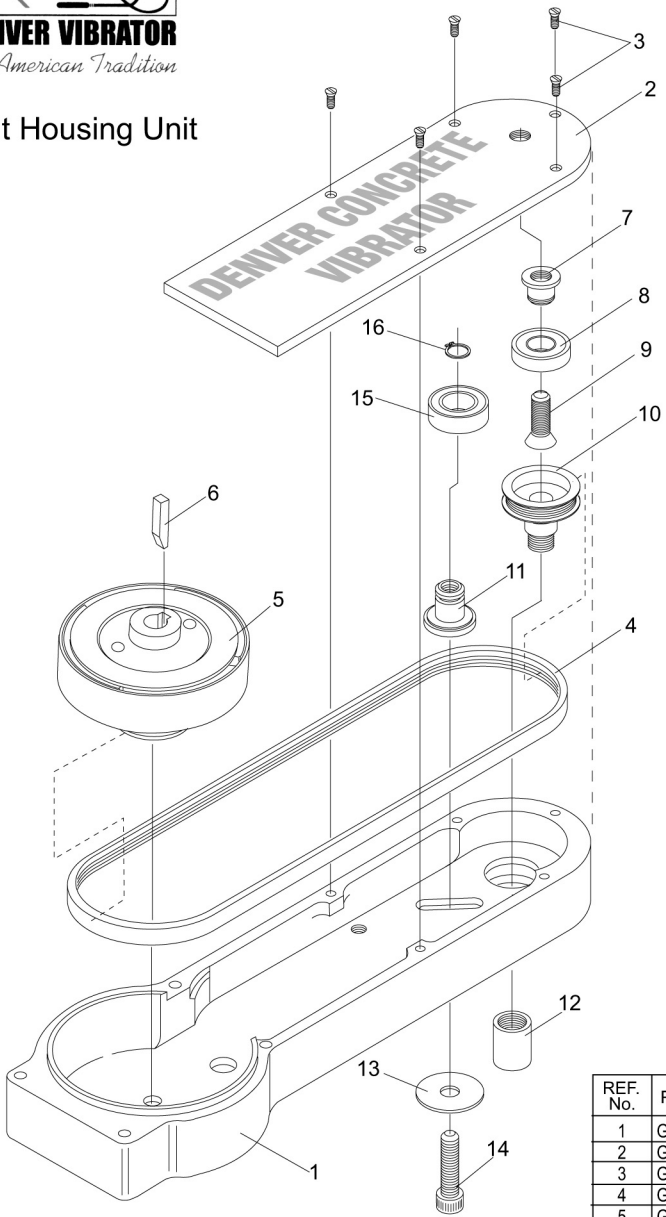

REF. No.	Part No.	Description
1	GBP0054	Drive Housing
2	GBP0056	Housing Cover
3	GBP0301	Screw, Cover
4	GBP0030	Belt Micro Drive
5	GBP0013	Cluth Assembly, V2
6	GBP0320	Alignment Key
7	GBP0040	Stud, Driven Pulley
8	BR120	Bearing
9	GBP0302	Screw, Modified
10	GBP0042	Pulley, Driven
11	GBP0016	Stud, Idler Bearing
12	D1.5-4	Driver
13	25004000	Washer
14	11054116	Bolt
15	BR120	Bearing
16	GBP0304	Snap Ring