DENVER VIBRATOR
An American Tradition

Centrifugal Clutch

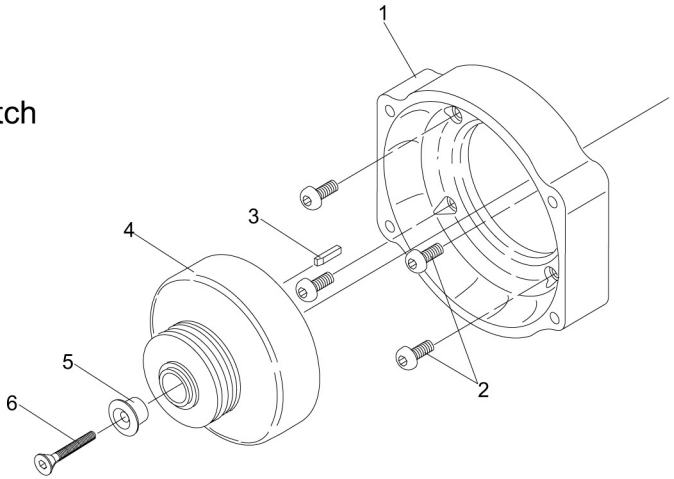

Quick Disconnect Assembly

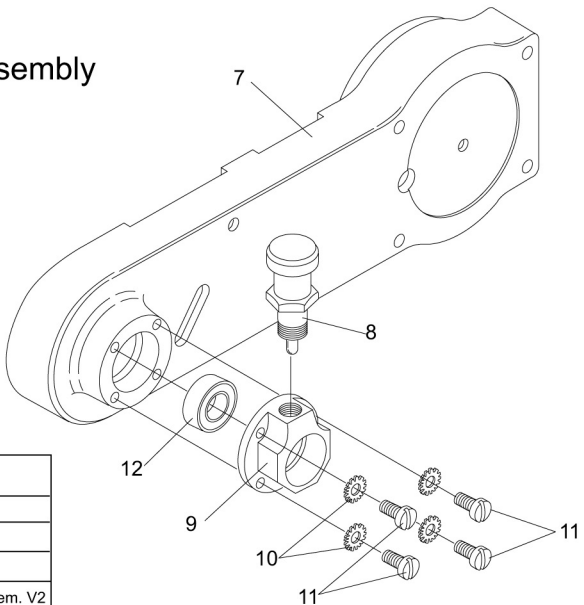

REF. No.	Part No.	Description
1	GBP0011	Clutch Housing
2	GBP0307	Screw
3	GBP0012	Alignment Key
4	GBP0013	Centrifugal Clutch Assem. V2
5	GBP0333	Bushing
6	11053920	Flat Head Socket Screw
7	GBP0054	Drive, Housing
8	FSQR-1	Plunger, Indexing
9	GBP0044	Reciever, QR
10	25623400	Washer, Star
11	12103408	Screw, Round Head
12	BR129	Bearing